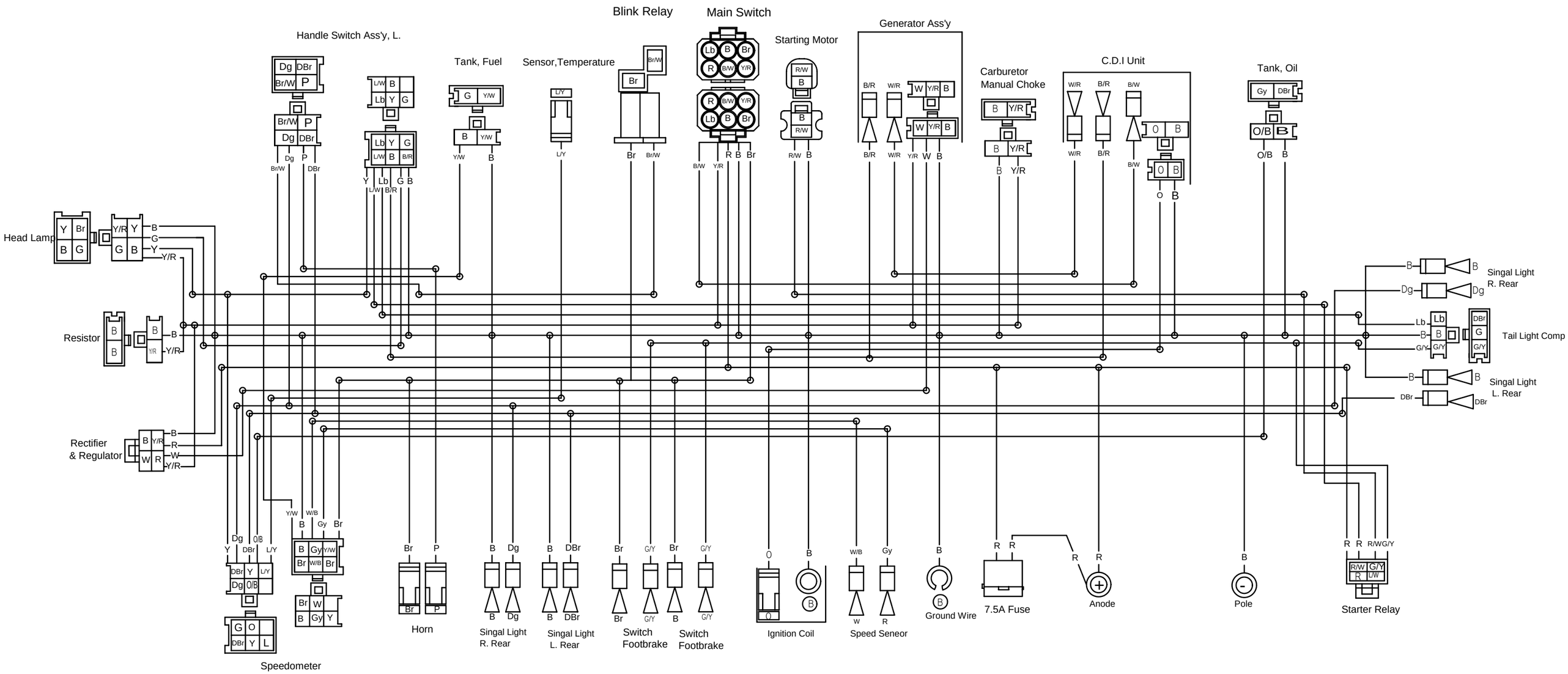
Handle Switch Ass'y, L.
Tank, Fuel
Sensor,Temperature
Blink Relay
Main Switch
Starting Motor
Generator Ass'y
Carburetor
Manual Choke
C.D.I Unit
Tank, Oil
Head Lamp
Resistor
Rectifier
& Regulator
Singal Light
R. Rear
Tail Light Comp
Singal Light
L. Rear
Speedometer
Horn
Singal Light
R. Rear
Singal Light
L. Rear
Switch
Footbrake
Switch
Footbrake
Ignition Coil
Speed Seneor
Ground Wire
7.5A Fuse
Anode
Pole
Starter Relay